Work Order ID 98032

98032

Tuesday, March 05, 2013 1:36:34 PM

Item ID: D2221 **Accept** *N900040100* **Setup Start** *NS1*

Revision ID: **Stop** *NS2*

Item Name: 350 Basket Base

Start Date: 3/4/2013 **Start Qty:** 1.00 *1*

Required Date: 4/9/2013 **Req'd Qty:** 1.00 *1*

Reference:

Cust Item ID:

Customer:

Approvals: **Process Plan:** _____ **Date:** 13-03-5 **Tooling:** _____ **Date:** _____

QC: _____ **Date:** _____ **SPC (Y/N):** _____ **Date:** _____

Run Start *NR1*

Stop *NR2*

Sequence ID/ Work Center ID	Operation Description	Set Up/ Run Hours	Tool ID	Tool #	Plan Code	Accept Qty	Reject Qty	Reject Number	Insp. Stamp
Draw Nbr	**Revision Nbr**								
D2221	Rev H								
100		0.00							
100	Large Fab								
Large Fab	**Memo**	0.00							
Large Fab	1- assemble all ribs and both D2581 in DT9444 jig, weld as per dwg D2221 2- remove basket from jig and weld D3442-1 shims and D2232-3 hinges as per dwg D2221 3- tack weld mesh on basket as per dwg D2221 A/R ER316 S.S. Rod Batch: M122357 ***PLEASE NOTE SEE DWG*** IF MAKING -141/-041A CUT BUSHING ON BASE BOTH ENDS, OR -143/-043A CUT BUSHING ON ONE SIDE ONLY OF BASKET BASE AS PER DWG								
110	QC9- Inspect visual per QSI004- Fusion Welds	0.00							
110									
QC	**Memo**	0.00							
Quality Control									

MW/CC 13-3-26

B-03-27 DAS 09

DQA: _____ Date: _____

NCR: Yes / No

WORK ORDER NON-CONFORMANCE / UPDATE

QA Closed: Date:

Work Order: _____

Part No. _____

NCR No. _____

DISPOSITION

- Rework ☐
- Scrap ☐
- Use-as-is ☐
- Work Order Update ☐

AGAINST DEPARTMENT/PROCESS

- Skid-tube ☐
- Machining ☐
- Thermoforming ☐
- Large Fab ☐
- Crosstube ☐
- Small Fab ☐
- Finishing ☐
- Composite ☐
- Water Jet ☐
- Prod. Eng. Coor. ☐
- Rec/Store/Packaging ☐
- Supplier ☐
- Engineering ☐
- Quality ☐
- Other ☐

Root Cause		Date	Step	Qty	Description of work order update or Non-conformance	Initial Chief Eng	Action Description	Sign & Date	Verification	QC Inspector
Doc/Data										
Equip/Tooling										
Operator										
Material										
Setup										
Other										
Process										
Supplier										
Training										
Unapproved										

FAULT CATEGORY

Landing Gear

- ☐ Bending
- ☐ Centre Not Concentric to O/S
- ☐ Cracks
- ☐ Crushed/Crimped
- ☐ Cuffs
- ☐ Heat Treat
- ☐ Inspection Strip in Tube
- ☐ Ripples in Bend
- ☐ Torque Waves in Extrusion
- ☐ Turning Sequence
- ☐ Wave/Twist in Tube

General

- ☐ Bend
- ☐ BOM/Route
- ☐ Broken/Damaged
- ☐ Burrs
- ☐ Contamination
- ☐ Countersink
- ☐ Cut Too Short
- ☐ Drill Holes
- ☐ Drawing
- ☐ Finish
- ☐ Folio
- ☐ Grain
- ☐ Hardware
- ☐ Inspection Incomplete
- ☐ Instructions Incomplete/Unclear
- ☐ Maintenance
- ☐ Mislabeled
- ☐ Misread
- ☐ Offset
- ☐ Out of Calibration
- ☐ Out of Sequence
- ☐ Outside Dimensions
- ☐ Ovalized
- ☐ Over/Under tolerance
- ☐ Part Incorrect
- ☐ Part Lost/Missing
- ☐ Part Moved
- ☐ Positioned Wrong
- ☐ Power Loss/Surge
- ☐ Pressure/Forced
- ☐ Temperature/Cure
- ☐ Weld
- ☐ Wrong Stock Pulled
- ☐ Other

_____

_____

_____

_____

Item ID: D2221 **Accept** *N900040100* **Setup Start** *NS1*
Revision ID: **Stop** *NS2*
Item Name: 350 Basket Base
Start Date: 3/4/2013 **Start Qty:** 1.00 *1* **Cust Item ID:**
Required Date: 4/9/2013 **Req'd Qty:** 1.00 *1* **Customer:**
Reference:

Run Start *NR1*
Stop *NR2*

Approvals: **Process Plan:** _____ **Date:** _____ **Tooling:** _____ **Date:** _____
QC: _____ **Date:** _____ **SPC (Y/N):** _____ **Date:** _____

Sequence ID/ Work Center ID	Operation Description	Set Up/ Run Hours	Tool ID	Tool #	Plan Code	Accept Qty	Reject Qty	Reject Number	Insp. Stamp
120	QC6- Inspect dimensions to drawing	0.00							
120							3-03-27		DAS 09 2-89
QC	**Memo**	0.00							
Quality Control									
125	Pressure Wash per QSI005 4.3	0.00							
125						1	13-3-27		
HandFinish	**Memo**	0.00							
Hand Finishing									

DQA: _____ Date: _____

NCR: Yes / No

WORK ORDER NON-CONFORMANCE / UPDATE

QA Closed: Date:

Work Order: _____

Part No. _____

NCR No. _____

DISPOSITION

- Rework ☐
- Scrap ☐
- Use-as-is ☐
- Work Order Update ☐

AGAINST DEPARTMENT/PROCESS

- Skid-tube ☐
- Machining ☐
- Thermoforming ☐
- Large Fab ☐
- Crosstube ☐
- Small Fab ☐
- Finishing ☐
- Composite ☐
- Water Jet ☐
- Prod. Eng. Coor. ☐
- Rec/Store/Packaging ☐
- Supplier ☐
- Engineering ☐
- Quality ☐
- Other ☐

Root Cause		Date	Step	Qty	Description of work order update or Non-conformance	Initial Chief Eng	Action Description	Sign & Date	Verification	QC Inspector
Doc/Data										
Equip/Tooling										
Operator										
Material										
Setup										
Other										
Process										
Supplier										
Training										
Unapproved										

FAULT CATEGORY

Landing Gear

- ☐ Bending
- ☐ Centre Not Concentric to O/S
- ☐ Cracks
- ☐ Crushed/Crimped
- ☐ Cuffs
- ☐ Heat Treat
- ☐ Inspection Strip in Tube
- ☐ Ripples in Bend
- ☐ Torque Waves in Extrusion
- ☐ Turning Sequence
- ☐ Wave/Twist in Tube

General

- ☐ Bend
- ☐ BOM/Route
- ☐ Broken/Damaged
- ☐ Burrs
- ☐ Contamination
- ☐ Countersink
- ☐ Cut Too Short
- ☐ Drill Holes
- ☐ Drawing
- ☐ Finish
- ☐ Folio
- ☐ Grain
- ☐ Hardware
- ☐ Inspection Incomplete
- ☐ Instructions Incomplete/Unclear
- ☐ Maintenance
- ☐ Mislabeled
- ☐ Misread
- ☐ Offset
- ☐ Out of Calibration
- ☐ Out of Sequence
- ☐ Outside Dimensions
- ☐ Ovalized
- ☐ Over/Under tolerance
- ☐ Part Incorrect
- ☐ Part Lost/Missing
- ☐ Part Moved
- ☐ Positioned Wrong
- ☐ Power Loss/Surge
- ☐ Pressure/Forced
- ☐ Temperature/Cure
- ☐ Weld
- ☐ Wrong Stock Pulled
- ☐ Other _____

Work Order ID 98032

98032

Tuesday, March 05, 2013 1:36:34 PM

Item ID: D2221 **Accept** *N900040100* **Setup Start** *NS1*

Revision ID: **Stop** *NS2*

Item Name: 350 Basket Base

Start Date: 3/4/2013 **Start Qty:** 1.00 *1* **Cust Item ID:**

Required Date: 4/9/2013 **Req'd Qty:** 1.00 *1* **Customer:**

Reference:

Run Start *NR1*

Stop *NR2*

Approvals: **Process Plan:** _____ **Date:** _____ **Tooling:** _____ **Date:** _____

QC: _____ **Date:** _____ **SPC (Y/N):** _____ **Date:** _____

Sequence ID/ Work Center ID	Operation Description	Set Up/ Run Hours	Tool ID	Tool #	Plan Code	Accept Qty	Reject Qty	Reject Number	Insp. Stamp
130	White Gloss(Ref:4.3.5.2) per QSI005 4.3-Steel	0.00				1	0		MF 13/03/27
130									
Powdercoat	**Memo**	0.00							
Powder Coating	1- Plug holes prior to								
	1ST COAT:								
M124245	START TIME: 10:50								
	OVEN TEMPERATURE: 400°F								
	FINISH TIME: 11:20								
	********** 2nd coat if necessary**********								
	2ND COAT:								
	START TIME: _____								
	OVEN TEMPERATURE: _____								
	FINISH TIME: _____								
140	QC3- Inspect Part Finish	0.00							
140									
QC	**Memo**	0.00							
Quality Control									

1 0 13-3-27

DQA: _____ Date: _____

NCR: Yes / No

WORK ORDER NON-CONFORMANCE / UPDATE

QA Closed: Date:

Work Order: _____

Part No. _____

NCR No. _____

DISPOSITION

- Rework ☐
- Scrap ☐
- Use-as-is ☐
- Work Order Update ☐

AGAINST DEPARTMENT/PROCESS

- Skid-tube ☐
- Machining ☐
- Thermoforming ☐
- Large Fab ☐
- Crosstube ☐
- Small Fab ☐
- Finishing ☐
- Composite ☐
- Water Jet ☐
- Prod. Eng. Coor. ☐
- Rec/Store/Packaging ☐
- Supplier ☐
- Engineering ☐
- Quality ☐
- Other ☐

Root Cause		Date	Step	Qty	Description of work order update or Non-conformance	Initial Chief Eng	Action Description	Sign & Date	Verification	QC Inspector
Doc/Data										
Equip/Tooling										
Operator										
Material										
Setup										
Other										
Process										
Supplier										
Training										
Unapproved										

FAULT CATEGORY

Landing Gear

- ☐ Bending
- ☐ Centre Not Concentric to O/S
- ☐ Cracks
- ☐ Crushed/Crimped
- ☐ Cuffs
- ☐ Heat Treat
- ☐ Inspection Strip in Tube
- ☐ Ripples in Bend
- ☐ Torque Waves in Extrusion
- ☐ Turning Sequence
- ☐ Wave/Twist in Tube

General

- ☐ Bend
- ☐ BOM/Route
- ☐ Broken/Damaged
- ☐ Burrs
- ☐ Contamination
- ☐ Countersink
- ☐ Cut Too Short
- ☐ Drill Holes
- ☐ Drawing
- ☐ Finish
- ☐ Folio
- ☐ Grain
- ☐ Hardware
- ☐ Inspection Incomplete
- ☐ Instructions Incomplete/Unclear
- ☐ Maintenance
- ☐ Mislabeled
- ☐ Misread
- ☐ Offset
- ☐ Out of Calibration
- ☐ Out of Sequence
- ☐ Outside Dimensions
- ☐ Ovalized
- ☐ Over/Under tolerance
- ☐ Part Incorrect
- ☐ Part Lost/Missing
- ☐ Part Moved
- ☐ Positioned Wrong
- ☐ Power Loss/Surge
- ☐ Pressure/Forced
- ☐ Temperature/Cure
- ☐ Weld
- ☐ Wrong Stock Pulled
- ☐ Other

_____

_____

_____

Work Order ID 98032 *98032*

Tuesday, March 05, 2013 1:36:34 PM

Item ID: D2221 **Accept** *N900040100* **Setup Start** *NS1*

Revision ID:

Item Name: 350 Basket Base **Stop** *NS2*

Start Date: 3/4/2013 **Start Qty:** 1.00 *1* **Cust Item ID:**

Required Date: 4/9/2013 **Req'd Qty:** 1.00 *1* **Customer:**

Reference:

Run Start *NR1*

Approvals: **Process Plan:** _____ **Date:** _____ **Tooling:** _____ **Date:** _____

QC: _____ **Date:** _____ **SPC (Y/N):** _____ **Date:** _____

Stop *NR2*

Sequence ID/ Work Center ID	Operation Description	Set Up/ Run Hours	Tool ID	Tool #	Plan Code	Accept Qty	Reject Qty	Reject Number	Insp. Stamp
150 *150* Packaging Packaging	Identify as per dwg & Stock Location: D350-607-041.	0.00	98080.			1	ϕ	BL	13-3-27.
	Memo	0.00							
160 *160* QC Quality Control	QC21- Final Inspection - Work Order Release	0.00				MLJ		13-04-02	
	Memo	0.00							

BL 13-04-2

DQA: _____ Date: _____

NCR: Yes / No

WORK ORDER NON-CONFORMANCE / UPDATE

QA Closed: Date:

Work Order: _____

Part No. _____

NCR No. _____

DISPOSITION

- Rework ☐
- Scrap ☐
- Use-as-is ☐
- Work Order Update ☐

AGAINST DEPARTMENT/PROCESS

- Skid-tube ☐
- Machining ☐
- Thermoforming ☐
- Large Fab ☐
- Crosstube ☐
- Small Fab ☐
- Finishing ☐
- Composite ☐
- Water Jet ☐
- Prod. Eng. Coor. ☐
- Rec/Store/Packaging ☐
- Supplier ☐
- Engineering ☐
- Quality ☐
- Other ☐

Root Cause		Date	Step	Qty	Description of work order update or Non-conformance	Initial Chief Eng	Action Description	Sign & Date	Verification	QC Inspector
Doc/Data										
Equip/Tooling										
Operator										
Material										
Setup										
Other										
Process										
Supplier										
Training										
Unapproved										

FAULT CATEGORY

Landing Gear

- ☐ Bending
- ☐ Centre Not Concentric to O/S
- ☐ Cracks
- ☐ Crushed/Crimped
- ☐ Cuffs
- ☐ Heat Treat
- ☐ Inspection Strip in Tube
- ☐ Ripples in Bend
- ☐ Torque Waves in Extrusion
- ☐ Turning Sequence
- ☐ Wave/Twist in Tube

General

- ☐ Bend
- ☐ BOM/Route
- ☐ Broken/Damaged
- ☐ Burrs
- ☐ Contamination
- ☐ Countersink
- ☐ Cut Too Short
- ☐ Drill Holes
- ☐ Drawing
- ☐ Finish
- ☐ Folio
- ☐ Grain
- ☐ Hardware
- ☐ Inspection Incomplete
- ☐ Instructions Incomplete/Unclear
- ☐ Maintenance
- ☐ Mislabeled
- ☐ Misread
- ☐ Offset
- ☐ Out of Calibration
- ☐ Out of Sequence
- ☐ Outside Dimensions
- ☐ Ovalized
- ☐ Over/Under tolerance
- ☐ Part Incorrect
- ☐ Part Lost/Missing
- ☐ Part Moved
- ☐ Positioned Wrong
- ☐ Power Loss/Surge
- ☐ Pressure/Forced
- ☐ Temperature/Cure
- ☐ Weld
- ☐ Wrong Stock Pulled
- ☐ Other

_____

_____

_____

_____

Picklist Print

Tuesday, March 05, 2013 1:36:40 PM

Work Order ID: 98032 *98032*

Parent Item: D2221 *D2221*

Parent Item Name: 350 Basket Base

Start Date: 3/4/2013 **Required Date:** 4/9/2013

Start Qty: 1.00 **Required Qty:** 1.00

Comments:
IPP Rev:J 05.09.02 Added D3442-1 KJ/JLM
IPP Rev:K 08-08-29 revG as per dwg DD verified by:EC
IPP Rev:L 08-09-24 plug holes prior to powder coat DD verified by:EC
IPP Rev:M 08-12-02 revH as per dwg DD verified by:EC IPP Rev:N
10.06.29 added pressure wash DD verf:EC

Component Item ID/ Item Name	Replacement Item ID	Mfg/ Purch	Bin Item	Primary Location	Last Location	Route Seq ID	Unit of Measure	Qty on Hand	Qty per Kit	Total Qty	Qty Issued	Date Issued	Status
D2221-1		Manufactured	No			100	Each	12.0000	1	1			
D2221-1 Rib									**	B90856 SH 13-03-20			
				Location		**Loc Qty**		**Loc Code**					
				WA005		12							
					86847	1							
					86848	1							
					90856	10							
D2221-5		Manufactured	No			100	Each	7.0000	2	2			
D2221-5 Rib									**	B94273 → 2x SH 13-03-20			
				Location		**Loc Qty**		**Loc Code**					
				WA004		5							
					90840	5							
				WA006		2							
					67117	2							
D2221-7		Manufactured	No			100	Each	5.0000	1	1			
D2221-7 Rib									**	B87715 SH 13-03-20			
				Location		**Loc Qty**		**Loc Code**					
				WA004		5							
					89398	5							

DQA: _____ Date: _____

NCR: Yes / No

WORK ORDER NON-CONFORMANCE / UPDATE

QA Closed: Date:

Work Order: _____

Part No. _____

NCR No. _____

DISPOSITION

- Rework ☐
- Scrap ☐
- Use-as-is ☐
- Work Order Update ☐

AGAINST DEPARTMENT/PROCESS

- Skid-tube ☐
- Machining ☐
- Thermoforming ☐
- Large Fab ☐
- Crosstube ☐
- Small Fab ☐
- Finishing ☐
- Composite ☐
- Water Jet ☐
- Prod. Eng. Coor. ☐
- Rec/Store/Packaging ☐
- Supplier ☐
- Engineering ☐
- Quality ☐
- Other ☐

Root Cause		Date	Step	Qty	Description of work order update or Non-conformance	Initial Chief Eng	Action Description	Sign & Date	Verification	QC Inspector
Doc/Data										
Equip/Tooling										
Operator										
Material										
Setup										
Other										
Process										
Supplier										
Training										
Unapproved										

FAULT CATEGORY

Landing Gear

- ☐ Bending
- ☐ Centre Not Concentric to O/S
- ☐ Cracks
- ☐ Crushed/Crimped
- ☐ Cuffs
- ☐ Heat Treat
- ☐ Inspection Strip in Tube
- ☐ Ripples in Bend
- ☐ Torque Waves in Extrusion
- ☐ Turning Sequence
- ☐ Wave/Twist in Tube

General

- ☐ Bend
- ☐ BOM/Route
- ☐ Broken/Damaged
- ☐ Burrs
- ☐ Contamination
- ☐ Countersink
- ☐ Cut Too Short
- ☐ Drill Holes
- ☐ Drawing
- ☐ Finish
- ☐ Folio
- ☐ Grain
- ☐ Hardware
- ☐ Inspection Incomplete
- ☐ Instructions Incomplete/Unclear
- ☐ Maintenance
- ☐ Mislabeled
- ☐ Misread
- ☐ Offset
- ☐ Out of Calibration
- ☐ Out of Sequence
- ☐ Outside Dimensions
- ☐ Ovalized
- ☐ Over/Under tolerance
- ☐ Part Incorrect
- ☐ Part Lost/Missing
- ☐ Part Moved
- ☐ Positioned Wrong
- ☐ Power Loss/Surge
- ☐ Pressure/Forced
- ☐ Temperature/Cure
- ☐ Weld
- ☐ Wrong Stock Pulled
- ☐ Other

_____

_____

_____

Work Order ID: 98032 *98032*
Parent Item: D2221 *D2221*
Parent Item Name: 350 Basket Base

Start Date: 3/4/2013 **Required Date:** 4/9/2013
Start Qty: 1.00 **Required Qty:** 1.00

D2232-3	Manufactured	No		100	Each	16.0000	2	2

D2232-3
Basket Hinge

** B 89358 → 2x
LL 13.03.20

Location	Loc Qty	Loc Code	
WA004	16		
75581	2		
89358	14		

D2235-1	Manufactured	No		100	Each	13.0000	2	2

D2235-1
Basket Rib

** B 94811 → 2x
LL 13.03.20

Location	Loc Qty	Loc Code	
WA004	13		
66895	4		
85602	4		
86051	1		
88209	4		

D2581	Manufactured	No		100	Each	48.0000	2	2

D2581
Mounting Bracket

** B 94204 → 2x
LL 13.03.20

Location	Loc Qty	Loc Code	
WA004	48		
70766	2		
81253	1		
82506	2		
83230	3		
85452	2		
87706	2		
92871	10		
94204	26		

DQA: _____ Date: _____

NCR: Yes / No

WORK ORDER NON-CONFORMANCE / UPDATE

QA Closed: Date:

Work Order: _____

Part No. _____

NCR No. _____

DISPOSITION

- Rework ☐
- Scrap ☐
- Use-as-is ☐
- Work Order Update ☐

AGAINST DEPARTMENT/PROCESS

- Skid-tube ☐
- Machining ☐
- Thermoforming ☐
- Large Fab ☐
- Crosstube ☐
- Small Fab ☐
- Finishing ☐
- Composite ☐
- Water Jet ☐
- Prod. Eng. Coor. ☐
- Rec/Store/Packaging ☐
- Supplier ☐
- Engineering ☐
- Quality ☐
- Other ☐

Root Cause		Date	Step	Qty	Description of work order update or Non-conformance	Initial Chief Eng	Action Description	Sign & Date	Verification	QC Inspector
Doc/Data	☐									
Equip/Tooling	☐									
Operator	☐									
Material	☐									
Setup	☐									
Other	☐									
Process	☐									
Supplier	☐									
Training	☐									
Unapproved	☐									

FAULT CATEGORY

Landing Gear

- ☐ Bending
- ☐ Centre Not Concentric to O/S
- ☐ Cracks
- ☐ Crushed/Crimped
- ☐ Cuffs
- ☐ Heat Treat
- ☐ Inspection Strip in Tube
- ☐ Ripples in Bend
- ☐ Torque Waves in Extrusion
- ☐ Turning Sequence
- ☐ Wave/Twist in Tube

General

- ☐ Bend
- ☐ BOM/Route
- ☐ Broken/Damaged
- ☐ Burrs
- ☐ Contamination
- ☐ Countersink
- ☐ Cut Too Short
- ☐ Drill Holes
- ☐ Drawing
- ☐ Finish
- ☐ Folio
- ☐ Grain
- ☐ Hardware
- ☐ Inspection Incomplete
- ☐ Instructions Incomplete/Unclear
- ☐ Maintenance
- ☐ Mislabeled
- ☐ Misread
- ☐ Offset
- ☐ Out of Calibration
- ☐ Out of Sequence
- ☐ Outside Dimensions
- ☐ Ovalized
- ☐ Over/Under tolerance
- ☐ Part Incorrect
- ☐ Part Lost/Missing
- ☐ Part Moved
- ☐ Positioned Wrong
- ☐ Power Loss/Surge
- ☐ Pressure/Forced
- ☐ Temperature/Cure
- ☐ Weld
- ☐ Wrong Stock Pulled
- ☐ Other

_____

_____

_____

_____

Picklist Print

Tuesday, March 05, 2013 1:36:40 PM

Work Order ID: 98032 *98032*

Parent Item: D2221 *D2221*

Parent Item Name: 350 Basket Base

Start Date: 3/4/2013 **Required Date:** 4/9/2013

Start Qty: 1.00 **Required Qty:** 1.00

D3442-1 Manufactured No 100 Each 16.0000 2 2

D3442-1 ** B 86720 → 2x

Shim SG 13.03.20

Location		Loc Qty	Loc Code
WA004		16	
	86720	12	
	90017	4	

D3825-041 Manufactured No 100 Each 16.0000 2 2

D3825-041 ** B89380 → 2x

Rib Assembly (Basket End) SG 13.03.20

Location		Loc Qty	Loc Code
WA004		16	
	89380	12	
	89450	4	

D3826-041 Manufactured No 100 Each 10.0000 2 2

D3826-041 ** B82306 → 2x

Rib / Gusset Assembly SG 13.03.20

Location		Loc Qty	Loc Code
WA004		4	
	90838	4	
WA007		6	
	90722	6	

D3827-041 Manufactured No 100 Each 8.0000 1 1

D3827-041 ** B 90866 SG 13.03.20

Rib Assembly (Inboard)

Location		Loc Qty	Loc Code
WA005		8	
	90866	6	
	95286	2	

DQA: _____ Date: _____

NCR: Yes / No

WORK ORDER NON-CONFORMANCE / UPDATE

QA Closed: Date:

Work Order: _____

Part No. _____

NCR No. _____

DISPOSITION

- Rework ☐
- Scrap ☐
- Use-as-is ☐
- Work Order Update ☐

AGAINST DEPARTMENT/PROCESS

- Skid-tube ☐
- Machining ☐
- Thermoforming ☐
- Large Fab ☐
- Crosstube ☐
- Small Fab ☐
- Finishing ☐
- Composite ☐
- Water Jet ☐
- Prod. Eng. Coor. ☐
- Rec/Store/Packaging ☐
- Supplier ☐
- Engineering ☐
- Quality ☐
- Other ☐

Root Cause		Date	Step	Qty	Description of work order update or Non-conformance	Initial Chief Eng	Action Description	Sign & Date	Verification	QC Inspector
Doc/Data										
Equip/Tooling										
Operator										
Material										
Setup										
Other										
Process										
Supplier										
Training										
Unapproved										

FAULT CATEGORY

Landing Gear

- ☐ Bending
- ☐ Centre Not Concentric to O/S
- ☐ Cracks
- ☐ Crushed/Crimped
- ☐ Cuffs
- ☐ Heat Treat
- ☐ Inspection Strip in Tube
- ☐ Ripples in Bend
- ☐ Torque Waves in Extrusion
- ☐ Turning Sequence
- ☐ Wave/Twist in Tube

General

- ☐ Bend
- ☐ BOM/Route
- ☐ Broken/Damaged
- ☐ Burrs
- ☐ Contamination
- ☐ Countersink
- ☐ Cut Too Short
- ☐ Drill Holes
- ☐ Drawing
- ☐ Finish
- ☐ Folio
- ☐ Grain
- ☐ Hardware
- ☐ Inspection Incomplete
- ☐ Instructions Incomplete/Unclear
- ☐ Maintenance
- ☐ Mislabeled
- ☐ Misread
- ☐ Offset
- ☐ Out of Calibration
- ☐ Out of Sequence
- ☐ Outside Dimensions
- ☐ Ovalized
- ☐ Over/Under tolerance
- ☐ Part Incorrect
- ☐ Part Lost/Missing
- ☐ Part Moved
- ☐ Positioned Wrong
- ☐ Power Loss/Surge
- ☐ Pressure/Forced
- ☐ Temperature/Cure
- ☐ Weld
- ☐ Wrong Stock Pulled
- ☐ Other

_____

_____

_____

_____

Picklist Print

Tuesday, March 05, 2013 1:36:40 PM

Work Order ID: 98032 *98032*

Parent Item: D2221 *D2221*

Parent Item Name: 350 Basket Base

Start Date: 3/4/2013 **Required Date:** 4/9/2013

Start Qty: 1.00 **Required Qty:** 1.00

D3832-1	Manufactured	No		100	Each	5.0000	1	1

D3832-1

Mesh (Base)

**

D87144 SH 13.03.20

Location	Loc Qty	Loc Code
WA	4	
96614	4	
WA007	1	
85951	1	

D3833-1	Manufactured	No		100	Each	14.0000	2	2

D3833-1

Mesh (Base End Face)

**

B ~~98~~ 98096 → 2x

SH 13.03.20

Location	Loc Qty	Loc Code
WA007	14	B 98096 → (2)
77521	4	
81259	1	
89208	1	
92602	8	

DQA: _____ Date: _____

NCR: Yes / No

WORK ORDER NON-CONFORMANCE / UPDATE

QA Closed: Date:

Work Order: _____

Part No. _____

NCR No. _____

DISPOSITION

- Rework ☐
- Scrap ☐
- Use-as-is ☐
- Work Order Update ☐

AGAINST DEPARTMENT/PROCESS

- Skid-tube ☐
- Machining ☐
- Thermoforming ☐
- Large Fab ☐
- Crosstube ☐
- Small Fab ☐
- Finishing ☐
- Composite ☐
- Water Jet ☐
- Prod. Eng. Coor. ☐
- Rec/Store/Packaging ☐
- Supplier ☐
- Engineering ☐
- Quality ☐
- Other ☐

Root Cause		Date	Step	Qty	Description of work order update or Non-conformance	Initial Chief Eng	Action Description	Sign & Date	Verification	QC Inspector
Doc/Data										
Equip/Tooling										
Operator										
Material										
Setup										
Other										
Process										
Supplier										
Training										
Unapproved										

FAULT CATEGORY

Landing Gear

- ☐ Bending
- ☐ Centre Not Concentric to O/S
- ☐ Cracks
- ☐ Crushed/Crimped
- ☐ Cuffs
- ☐ Heat Treat
- ☐ Inspection Strip in Tube
- ☐ Ripples in Bend
- ☐ Torque Waves in Extrusion
- ☐ Turning Sequence
- ☐ Wave/Twist in Tube

General

- ☐ Bend
- ☐ BOM/Route
- ☐ Broken/Damaged
- ☐ Burrs
- ☐ Contamination
- ☐ Countersink
- ☐ Cut Too Short
- ☐ Drill Holes
- ☐ Drawing
- ☐ Finish
- ☐ Folio
- ☐ Grain
- ☐ Hardware
- ☐ Inspection Incomplete
- ☐ Instructions Incomplete/Unclear
- ☐ Maintenance
- ☐ Mislabeled
- ☐ Misread
- ☐ Offset
- ☐ Out of Calibration
- ☐ Out of Sequence
- ☐ Outside Dimensions
- ☐ Ovalized
- ☐ Over/Under tolerance
- ☐ Part Incorrect
- ☐ Part Lost/Missing
- ☐ Part Moved
- ☐ Positioned Wrong
- ☐ Power Loss/Surge
- ☐ Pressure/Forced
- ☐ Temperature/Cure
- ☐ Weld
- ☐ Wrong Stock Pulled
- ☐ Other

_____

_____

_____

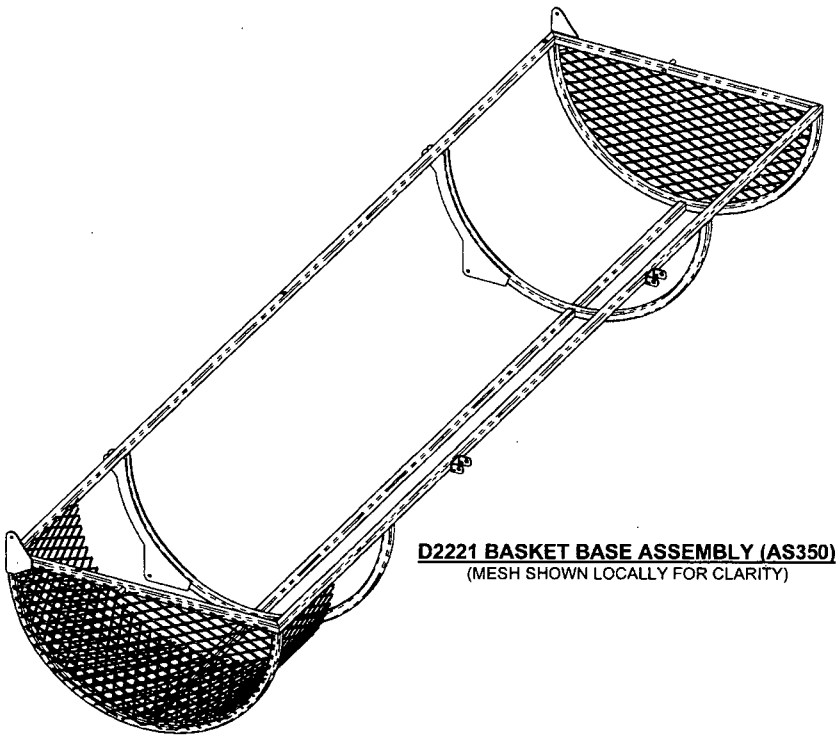

D2221 BASKET BASE ASSEMBLY (AS350)
(MESH SHOWN LOCALLY FOR CLARITY)

ITEM	QTY	P/N	DESCRIPTION
1	X	D2221	BASKET BASE ASSEMBLY (AS350)
2	1	D2221-1	RIB
3	2	D2221-5	RIB
4	1	D2221-7	RIB
5	2	D2232-3	BASKET HINGE
6	2	D2235-1	RIB
7	2	D2581	MOUNTING BRACKET
8	2	D3442-1	SHIM
9	2	D3825-041	RIB ASSY (BASKET END)
10	2	D3826-041	RIB/GUSSET ASSY
11	1	D3827-041	RIB ASSY (INBOARD)
12	2	D3833-1	MESH, BASE END FACE
13	1	D3832-1	MESH (BASE)

13.03-5

RELEASED 08/11/18

REV.	DESCRIPTION	BY	DATE
H	REVISED PARTS LIST AND ADDED "ITEM" COLUMN TO PARTS LIST (ZN D3-1); REVISED SECTIONS A-A, B-B AND C-C (ZN C6-3, C2-3 AND A6-3); REVISED DETAIL D (ZN B7-4); ADDED DETAIL E (ZN A6-4); ADDED SECTION F-F (ZN B2-4); ADDED DWG DETAILS FOR D2221-1/-5/-7 (SHEET 5); TOL REVISED TO 2 DEC PLACES (ZN D8-3 AND ZN B4-3); D3825-041 REPLACES D2221-3/D2327-3; D3826-041 REPLACES D2235-1/D2325; D3827-041 REPLACES D2221-1 ON INBOARD SIDE; ADDED D3832-1 AND D3833-1. REASON: SATISFY "LEAN MANUFACTURING" PROGRAM.	MB	08.09.18
G	MATERIAL FOR -1, -3, -5 & -7 WAS 0.060 WALL; TOLERANCE FOR 96.00 DIM WAS +/-0.01 AND 56.00 DIM WAS REF (ZN B5-2); 19.62 DIM WAS "HARD" DIMENSION IS NOW "REF" (ZN B4-2); NOTE 5 TRANSFERED FROM SHT 1 TO SHT 2; SHT 2 MESH MATERIAL UPDATED; DRAWING TRANSFERED TO "B" FORMAT	AJS	08.06.16
F	ADD SHIM UNDER HINGE; ADD HOLES FOR SPLIT LID BASKET	PH	05.06.07
E	CHANGE HINGE	CP	01.04.19
D	CHANGE LATCH	BW	96.06.21
C	SEPARATE BASKET AND LID	KH	95.11.21

NOTES:
1) MATERIAL: N/A
2) FINISH: POWDER COAT GLOSS WHITE (4.3.5.2) PER DART QSI 005 4.3
3) TOLERANCES: PER DART QSI 018 UNLESS OTHERWISE NOTED
4) UNITS: INCHES UNLESS OTHERWISE NOTED
5) BREAK SHARP EDGES: 0.005 TO 0.010 MAX
6) IDENTIFICATION: N/A
8) WEIGHT: 42.00 lbs APPROX
9) MASK ALL HOLES PRIOR TO POWDER COATING

DESIGN	BW	**DART AEROSPACE LTD** HAWKESBURY, ONTARIO, CANADA
DRAWN		
CHECKED		DRAWING NO. D2221 — REV. H — SHEET 1 OF 5
MFG. APPR.		
APPROVED		TITLE BASKET BASE ASSEMBLY (350) — SCALE NTS
DE APPR.		
DATE	08.09.18	

COPYRIGHT © 1994 BY DART AEROSPACE LTD
THIS DOCUMENT IS PRIVATE AND CONFIDENTIAL AND IS SUPPLIED ON THE EXPRESS CONDITION THAT IT IS NOT TO BE USED FOR ANY PURPOSE OR COPIED OR COMMUNICATED TO ANY OTHER PERSON WITHOUT WRITTEN PERMISSION FROM DART AEROSPACE LTD

DQA: _____ Date: _____

NCR: Yes / No

WORK ORDER NON-CONFORMANCE / UPDATE

QA Closed: Date:

Work Order: _____

Part No. _____

NCR No. _____

DISPOSITION

- Rework ☐
- Scrap ☐
- Use-as-is ☐
- Work Order Update ☐

AGAINST DEPARTMENT/PROCESS

- Skid-tube ☐
- Machining ☐
- Thermoforming ☐
- Large Fab ☐
- Crosstube ☐
- Small Fab ☐
- Finishing ☐
- Composite ☐
- Water Jet ☐
- Prod. Eng. Coor. ☐
- Rec/Store/Packaging ☐
- Supplier ☐
- Engineering ☐
- Quality ☐
- Other ☐

Root Cause		Date	Step	Qty	Description of work order update or Non-conformance	Initial Chief Eng	Action Description	Sign & Date	Verification	QC Inspector
Doc/Data	☐									
Equip/Tooling	☐									
Operator	☐									
Material	☐									
Setup	☐									
Other	☐									
Process	☐									
Supplier	☐									
Training	☐									
Unapproved	☐									

FAULT CATEGORY

Landing Gear

- ☐ Bending
- ☐ Centre Not Concentric to O/S
- ☐ Cracks
- ☐ Crushed/Crimped
- ☐ Cuffs
- ☐ Heat Treat
- ☐ Inspection Strip in Tube
- ☐ Ripples in Bend
- ☐ Torque Waves in Extrusion
- ☐ Turning Sequence
- ☐ Wave/Twist in Tube

General

- ☐ Bend
- ☐ BOM/Route
- ☐ Broken/Damaged
- ☐ Burrs
- ☐ Contamination
- ☐ Countersink
- ☐ Cut Too Short
- ☐ Drill Holes
- ☐ Drawing
- ☐ Finish
- ☐ Folio
- ☐ Grain
- ☐ Hardware
- ☐ Inspection Incomplete
- ☐ Instructions Incomplete/Unclear
- ☐ Maintenance
- ☐ Mislabeled
- ☐ Misread
- ☐ Offset
- ☐ Out of Calibration
- ☐ Out of Sequence
- ☐ Outside Dimensions
- ☐ Ovalized
- ☐ Over/Under tolerance
- ☐ Part Incorrect
- ☐ Part Lost/Missing
- ☐ Part Moved
- ☐ Positioned Wrong
- ☐ Power Loss/Surge
- ☐ Pressure/Forced
- ☐ Temperature/Cure
- ☐ Weld
- ☐ Wrong Stock Pulled
- ☐ Other

_____

_____

_____

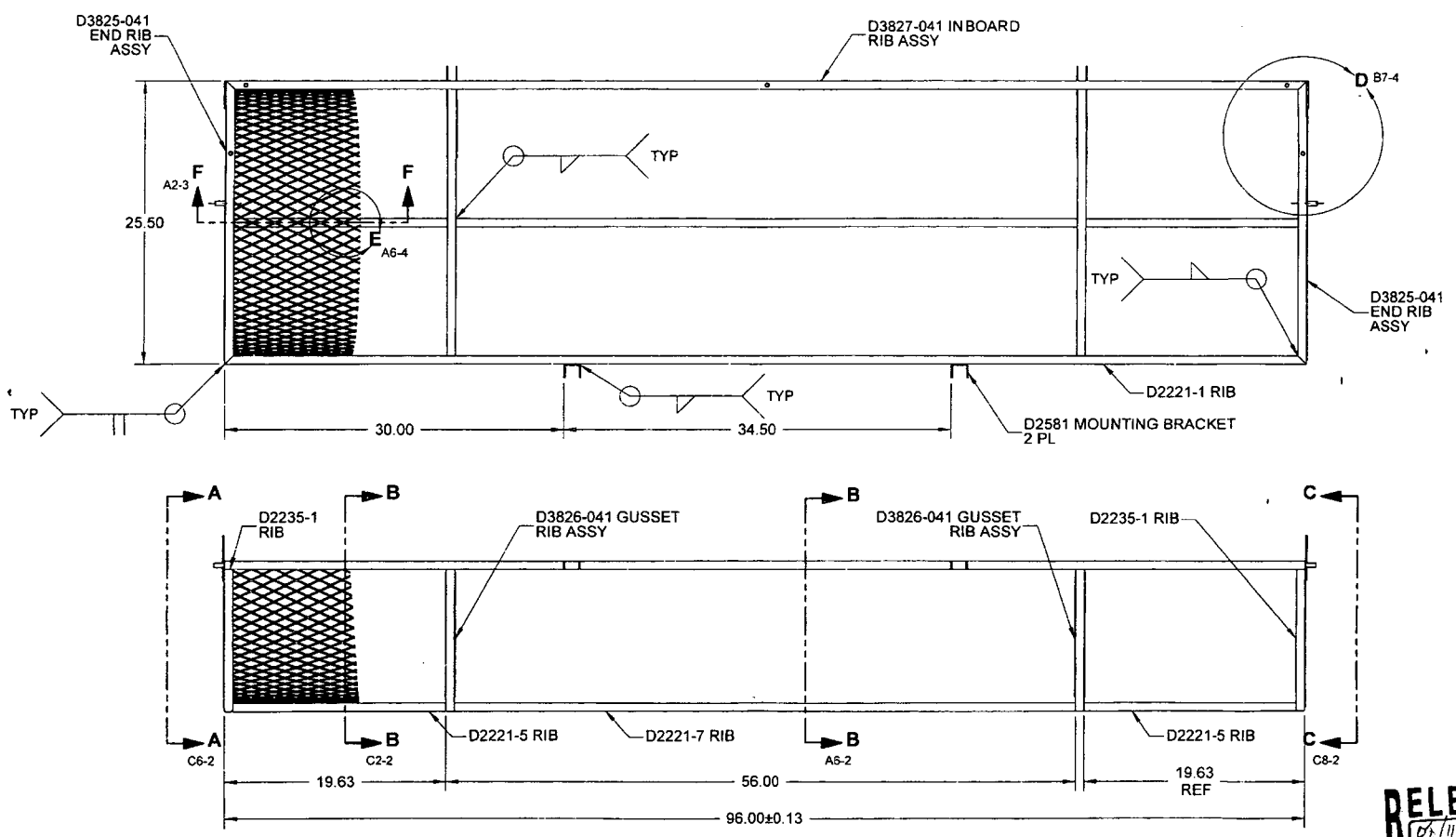

98032

RELEASED 08/11/18

D2221 BASKET BASE ASSEMBLY (350)
(MESH SHOWN LOCALLY FOR CLARITY)

DESIGN	BW	**DART AEROSPACE LTD** HAWKESBURY, ONTARIO, CANADA
DRAWN		
CHECKED		DRAWING NO. D2221 — REV. H — SHEET 2 OF 5
MFG. APPR.		
APPROVED		TITLE BASKET BASE ASSEMBLY (350) — SCALE NTS
DE APPR.		
DATE	08.09.18	

COPYRIGHT © 1994 BY DART AEROSPACE LTD
THIS DOCUMENT IS PRIVATE AND CONFIDENTIAL AND IS SUPPLIED ON THE EXPRESS CONDITION THAT IT IS NOT TO BE USED FOR ANY PURPOSE OR COPIED OR COMMUNICATED TO ANY OTHER PERSON WITHOUT WRITTEN PERMISSION FROM DART AEROSPACE LTD

DQA: _____ Date: _____

NCR: Yes / No

WORK ORDER NON-CONFORMANCE / UPDATE

QA Closed: Date:

Work Order: _____

Part No. _____

NCR No. _____

DISPOSITION

- Rework ☐
- Scrap ☐
- Use-as-is ☐
- Work Order Update ☐

AGAINST DEPARTMENT/PROCESS

- Skid-tube ☐
- Machining ☐
- Thermoforming ☐
- Large Fab ☐
- Crosstube ☐
- Small Fab ☐
- Finishing ☐
- Composite ☐
- Water Jet ☐
- Prod. Eng. Coor. ☐
- Rec/Store/Packaging ☐
- Supplier ☐
- Engineering ☐
- Quality ☐
- Other ☐

Root Cause		Date	Step	Qty	Description of work order update or Non-conformance	Initial Chief Eng	Action Description	Sign & Date	Verification	QC Inspector
Doc/Data	☐									
Equip/Tooling	☐									
Operator	☐									
Material	☐									
Setup	☐									
Other	☐									
Process	☐									
Supplier	☐									
Training	☐									
Unapproved	☐									

FAULT CATEGORY

Landing Gear

- ☐ Bending
- ☐ Centre Not Concentric to O/S
- ☐ Cracks
- ☐ Crushed/Crimped
- ☐ Cuffs
- ☐ Heat Treat
- ☐ Inspection Strip in Tube
- ☐ Ripples in Bend
- ☐ Torque Waves in Extrusion
- ☐ Turning Sequence
- ☐ Wave/Twist in Tube

General

- ☐ Bend
- ☐ BOM/Route
- ☐ Broken/Damaged
- ☐ Burrs
- ☐ Contamination
- ☐ Countersink
- ☐ Cut Too Short
- ☐ Drill Holes
- ☐ Drawing
- ☐ Finish
- ☐ Folio
- ☐ Grain
- ☐ Hardware
- ☐ Inspection Incomplete
- ☐ Instructions Incomplete/Unclear
- ☐ Maintenance
- ☐ Mislabeled
- ☐ Misread
- ☐ Offset
- ☐ Out of Calibration
- ☐ Out of Sequence
- ☐ Outside Dimensions
- ☐ Ovalized
- ☐ Over/Under tolerance
- ☐ Part Incorrect
- ☐ Part Lost/Missing
- ☐ Part Moved
- ☐ Positioned Wrong
- ☐ Power Loss/Surge
- ☐ Pressure/Forced
- ☐ Temperature/Cure
- ☐ Weld
- ☐ Wrong Stock Pulled
- ☐ Other

_____

_____

_____

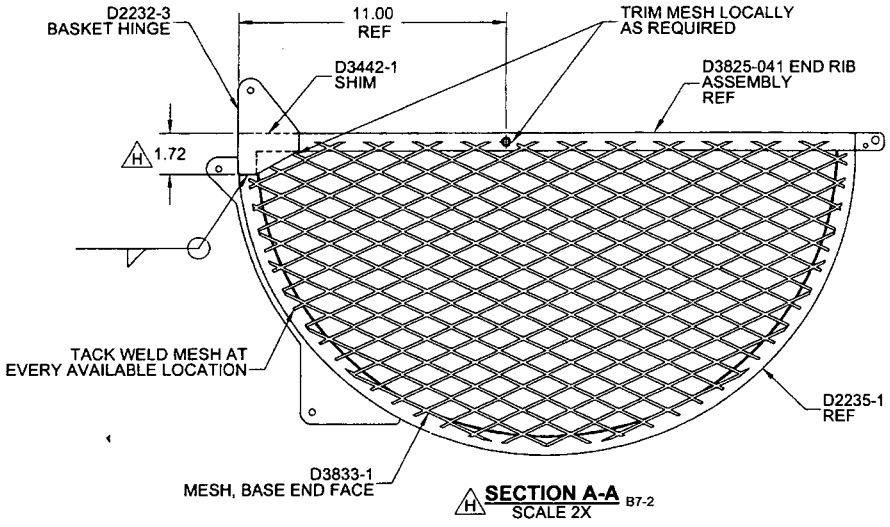

H **SECTION A-A** B7-2
SCALE 2X

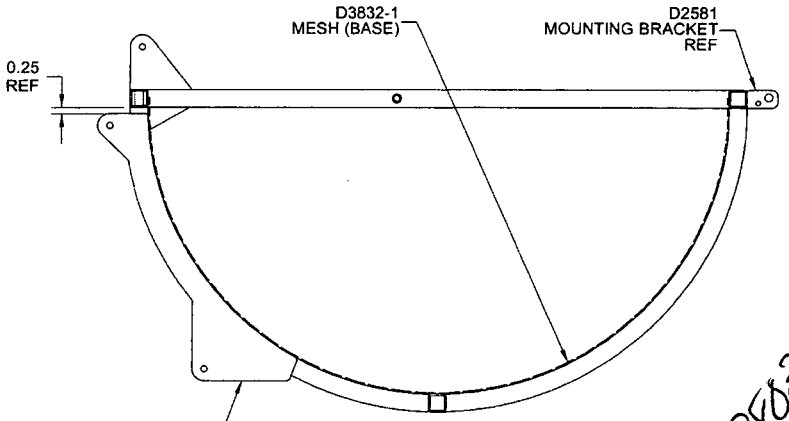

H **SECTION B-B** B6-2 B4-2
(D3833-1 MESH NOT SHOWN FOR CLARITY)
SCALE 2X

98032

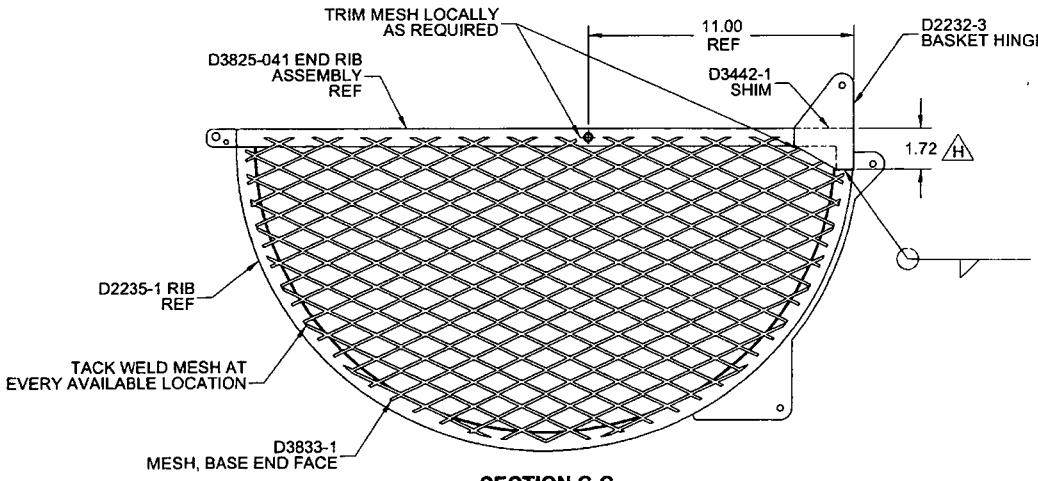

H **SECTION C-C** B2-2
SCALE 2X

RELEASED
05/11/18

DESIGN	BW	**DART AEROSPACE LTD**	
DRAWN		HAWKESBURY, ONTARIO, CANADA	
CHECKED		DRAWING NO.	REV. H
MFG. APPR.		D2221	SHEET 3 OF 5
APPROVED		TITLE	SCALE
DE APPR.		BASKET BASE ASSEMBLY (350)	NTS
DATE	08.09.18		

COPYRIGHT © 1994 BY DART AEROSPACE LTD
THIS DOCUMENT IS PRIVATE AND CONFIDENTIAL AND IS SUPPLIED ON THE EXPRESS CONDITION THAT IT IS NOT TO BE USED FOR ANY PURPOSE OR COPIED OR COMMUNICATED TO ANY OTHER PERSON WITHOUT WRITTEN PERMISSION FROM DART AEROSPACE LTD

DQA: _____ Date: _____

NCR: Yes / No

WORK ORDER NON-CONFORMANCE / UPDATE

QA Closed: Date:

Work Order: _____

Part No. _____

NCR No. _____

DISPOSITION

- Rework ☐
- Scrap ☐
- Use-as-is ☐
- Work Order Update ☐

AGAINST DEPARTMENT/PROCESS

- Skid-tube ☐
- Machining ☐
- Thermoforming ☐
- Large Fab ☐
- Crosstube ☐
- Small Fab ☐
- Finishing ☐
- Composite ☐
- Water Jet ☐
- Prod. Eng. Coor. ☐
- Rec/Store/Packaging ☐
- Supplier ☐
- Engineering ☐
- Quality ☐
- Other ☐

Root Cause		Date	Step	Qty	Description of work order update or Non-conformance	Initial Chief Eng	Action Description	Sign & Date	Verification	QC Inspector
Doc/Data										
Equip/Tooling										
Operator										
Material										
Setup										
Other										
Process										
Supplier										
Training										
Unapproved										

FAULT CATEGORY

Landing Gear

- ☐ Bending
- ☐ Centre Not Concentric to O/S
- ☐ Cracks
- ☐ Crushed/Crimped
- ☐ Cuffs
- ☐ Heat Treat
- ☐ Inspection Strip in Tube
- ☐ Ripples in Bend
- ☐ Torque Waves in Extrusion
- ☐ Turning Sequence
- ☐ Wave/Twist in Tube

General

- ☐ Bend
- ☐ BOM/Route
- ☐ Broken/Damaged
- ☐ Burrs
- ☐ Contamination
- ☐ Countersink
- ☐ Cut Too Short
- ☐ Drill Holes
- ☐ Drawing
- ☐ Finish
- ☐ Folio
- ☐ Grain
- ☐ Hardware
- ☐ Inspection Incomplete
- ☐ Instructions Incomplete/Unclear
- ☐ Maintenance
- ☐ Mislabeled
- ☐ Misread
- ☐ Offset
- ☐ Out of Calibration
- ☐ Out of Sequence
- ☐ Outside Dimensions
- ☐ Ovalized
- ☐ Over/Under tolerance
- ☐ Part Incorrect
- ☐ Part Lost/Missing
- ☐ Part Moved
- ☐ Positioned Wrong
- ☐ Power Loss/Surge
- ☐ Pressure/Forced
- ☐ Temperature/Cure
- ☐ Weld
- ☐ Wrong Stock Pulled
- ☐ Other

_____

_____

_____

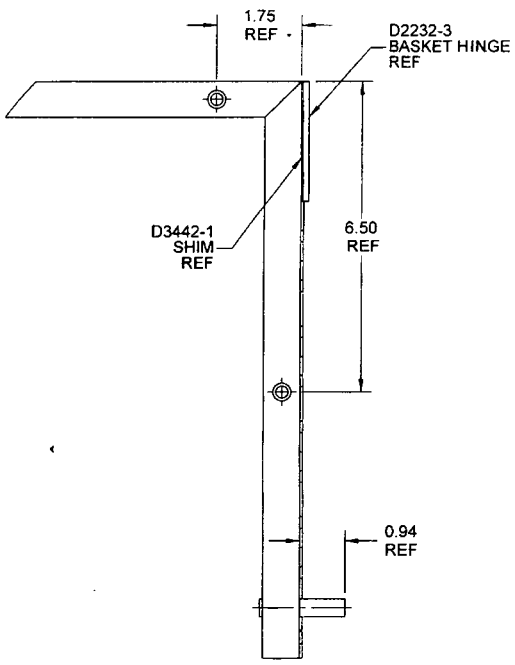

DETAIL D SCALE 4X D2-2

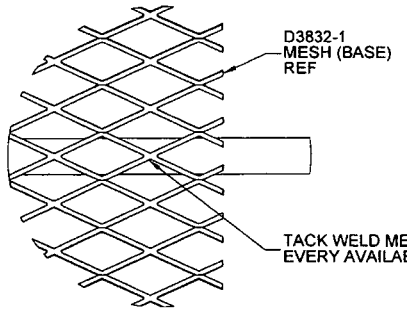

DETAIL E SCALE 4X C6-2

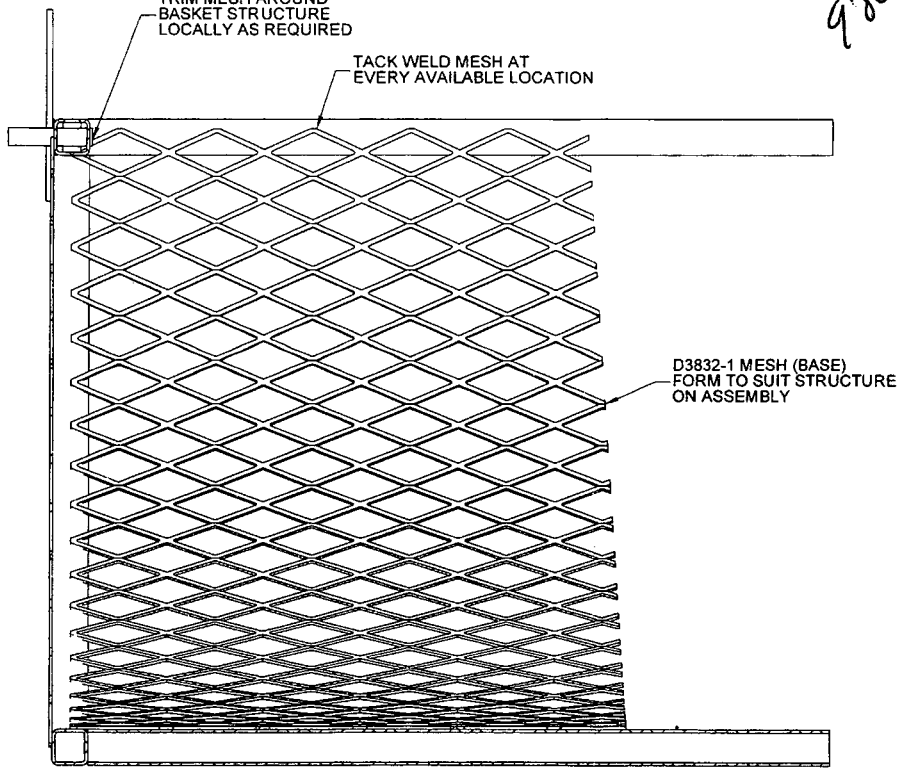

SECTION F-F SCALE 4X D7-2

9803

RELEASED 08/11/18

DESIGN	BW	**DART AEROSPACE LTD** HAWKESBURY, ONTARIO, CANADA
DRAWN		
CHECKED		DRAWING NO. D2221 REV. H SHEET 4 OF 5
MFG. APPR.		
APPROVED		TITLE BASKET BASE ASSEMBLY (350) SCALE NTS
DE APPR.		
DATE 08.09.18		

COPYRIGHT © 1994 BY DART AEROSPACE LTD
THIS DOCUMENT IS PRIVATE AND CONFIDENTIAL AND IS SUPPLIED ON THE EXPRESS CONDITION THAT IT IS NOT TO BE USED FOR ANY PURPOSE OR COPIED OR COMMUNICATED TO ANY OTHER PERSON WITHOUT WRITTEN PERMISSION FROM DART AEROSPACE LTD

DQA: _____ Date: _____

NCR: Yes / No

WORK ORDER NON-CONFORMANCE / UPDATE

QA Closed: Date:

Work Order: _____

Part No. _____

NCR No. _____

DISPOSITION

- Rework ☐
- Scrap ☐
- Use-as-is ☐
- Work Order Update ☐

AGAINST DEPARTMENT/PROCESS

- Skid-tube ☐
- Machining ☐
- Thermoforming ☐
- Large Fab ☐
- Crosstube ☐
- Small Fab ☐
- Finishing ☐
- Composite ☐
- Water Jet ☐
- Prod. Eng. Coor. ☐
- Rec/Store/Packaging ☐
- Supplier ☐
- Engineering ☐
- Quality ☐
- Other ☐

Root Cause		Date	Step	Qty	Description of work order update or Non-conformance	Initial Chief Eng	Action Description	Sign & Date	Verification	QC Inspector
Doc/Data										
Equip/Tooling										
Operator										
Material										
Setup										
Other										
Process										
Supplier										
Training										
Unapproved										

FAULT CATEGORY

Landing Gear

- ☐ Bending
- ☐ Centre Not Concentric to O/S
- ☐ Cracks
- ☐ Crushed/Crimped
- ☐ Cuffs
- ☐ Heat Treat
- ☐ Inspection Strip in Tube
- ☐ Ripples in Bend
- ☐ Torque Waves in Extrusion
- ☐ Turning Sequence
- ☐ Wave/Twist in Tube

General

- ☐ Bend
- ☐ BOM/Route
- ☐ Broken/Damaged
- ☐ Burrs
- ☐ Contamination
- ☐ Countersink
- ☐ Cut Too Short
- ☐ Drill Holes
- ☐ Drawing
- ☐ Finish
- ☐ Folio
- ☐ Grain
- ☐ Hardware
- ☐ Inspection Incomplete
- ☐ Instructions Incomplete/Unclear
- ☐ Maintenance
- ☐ Mislabeled
- ☐ Misread
- ☐ Offset
- ☐ Out of Calibration
- ☐ Out of Sequence
- ☐ Outside Dimensions
- ☐ Ovalized
- ☐ Over/Under tolerance
- ☐ Part Incorrect
- ☐ Part Lost/Missing
- ☐ Part Moved
- ☐ Positioned Wrong
- ☐ Power Loss/Surge
- ☐ Pressure/Forced
- ☐ Temperature/Cure
- ☐ Weld
- ☐ Wrong Stock Pulled
- ☐ Other _____

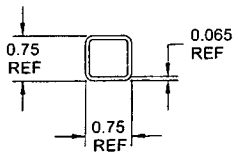

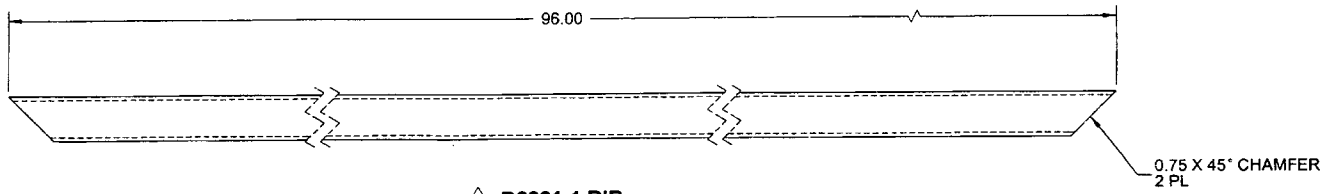

H **D2221-1 RIB**

98032

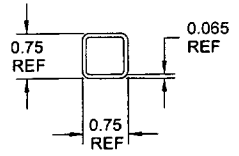

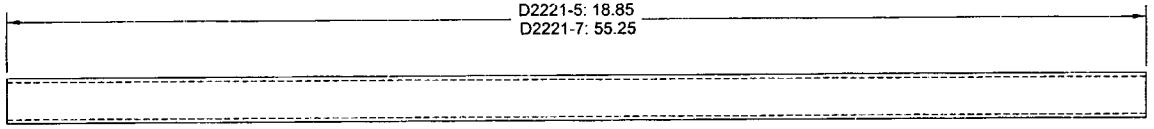

H **D2221-5/-7 RIB**

RELEASED 08/11/18 JW

NOTES:
1) MATERIAL: AISI 304/316 STAINLESS STEEL SQUARE TUBE, 0.75 X 0.75 X 0.065 WALL
REF. DART SPEC. M304TS0.750W0.065
2) FINISH: NONE
3) TOLERANCES: PER DART QSI 018 UNLESS OTHERWISE NOTED
4) UNITS: INCHES UNLESS OTHERWISE NOTED
5) BREAK SHARP EDGES: 0.005 TO 0.010 MAX
6) IDENTIFICATION: N/A
8) WEIGHT:D2221 -1 = 4.57 lbs; D2221-5 = 0.90 lbs; D2221-7 2.65 = lbs

DESIGN	BW	**DART AEROSPACE LTD** HAWKESBURY, ONTARIO, CANADA
DRAWN		
CHECKED		DRAWING NO. D2221 REV. H
MFG. APPR.		SHEET 5 OF 5
APPROVED		TITLE BASKET BASE ASSEMBLY (350) SCALE NTS
DE APPR.		
DATE	08.09.18	

COPYRIGHT © 1994 BY DART AEROSPACE LTD
THIS DOCUMENT IS PRIVATE AND CONFIDENTIAL AND IS SUPPLIED ON THE EXPRESS CONDITION THAT IT IS NOT TO BE USED FOR ANY PURPOSE OR COPIED OR COMMUNICATED TO ANY OTHER PERSON WITHOUT WRITTEN PERMISSION FROM DART AEROSPACE LTD.

NCR: Yes / No

DQA: _____ Date: _____

WORK ORDER NON-CONFORMANCE / UPDATE

QA Closed: Date:

Work Order: _____

Part No. _____

NCR No. _____

DISPOSITION

- Rework ☐
- Scrap ☐
- Use-as-is ☐
- Work Order Update ☐

AGAINST DEPARTMENT/PROCESS

- Skid-tube ☐
- Machining ☐
- Thermoforming ☐
- Large Fab ☐
- Crosstube ☐
- Small Fab ☐
- Finishing ☐
- Composite ☐
- Water Jet ☐
- Prod. Eng. Coor. ☐
- Rec/Store/Packaging ☐
- Supplier ☐
- Engineering ☐
- Quality ☐
- Other ☐

Root Cause		Date	Step	Qty	Description of work order update or Non-conformance	Initial Chief Eng	Action Description	Sign & Date	Verification	QC Inspector
Doc/Data	☐									
Equip/Tooling	☐									
Operator	☐									
Material	☐									
Setup	☐									
Other	☐									
Process	☐									
Supplier	☐									
Training	☐									
Unapproved	☐									

FAULT CATEGORY

Landing Gear

- ☐ Bending
- ☐ Centre Not Concentric to O/S
- ☐ Cracks
- ☐ Crushed/Crimped.
- ☐ Cuffs
- ☐ Heat Treat
- ☐ Inspection Strip in Tube
- ☐ Ripples in Bend
- ☐ Torque Waves in Extrusion
- ☐ Turning Sequence
- ☐ Wave/Twist in Tube

General

- ☐ Bend
- ☐ BOM/Route
- ☐ Broken/Damaged
- ☐ Burrs
- ☐ Contamination
- ☐ Countersink
- ☐ Cut Too Short
- ☐ Drill Holes
- ☐ Drawing
- ☐ Finish
- ☐ Folio
- ☐ Grain
- ☐ Hardware
- ☐ Inspection Incomplete
- ☐ Instructions Incomplete/Unclear
- ☐ Maintenance
- ☐ Mislabeled
- ☐ Misread
- ☐ Offset
- ☐ Out of Calibration
- ☐ Out of Sequence
- ☐ Outside Dimensions
- ☐ Ovalized
- ☐ Over/Under tolerance
- ☐ Part Incorrect
- ☐ Part Lost/Missing
- ☐ Part Moved
- ☐ Positioned Wrong
- ☐ Power Loss/Surge
- ☐ Pressure/Forced
- ☐ Temperature/Cure
- ☐ Weld
- ☐ Wrong Stock Pulled
- ☐ Other

_____

_____

_____